REVISION HISTORY				
ZONE	REV	DESCRIPTION	DATE	APPROVED
	4	Additional Mounting holes on back. M3 grub screw holes now present both sides of heat breaks.	21/11/2014	
	5	11 Fins	27/05/2015	
	6	Grub screws on side	17/09/2015	

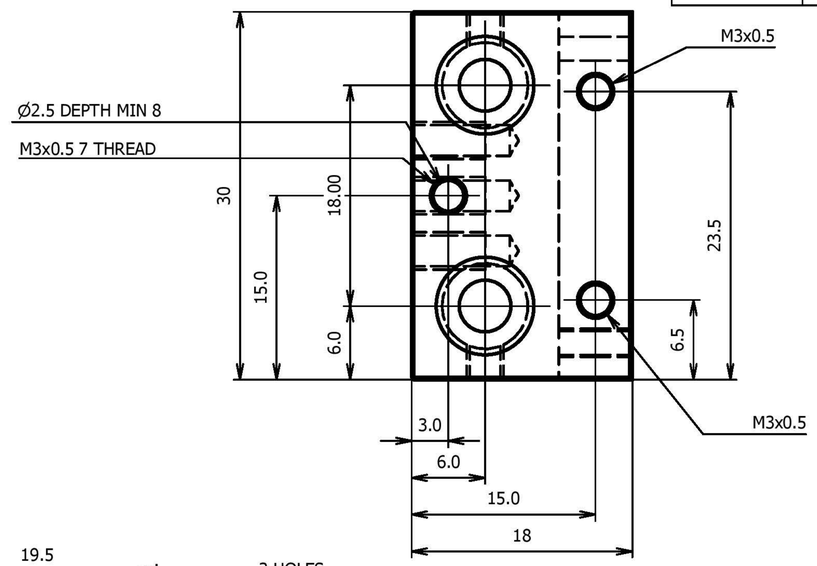

THIRD ANGLE PROJECTION
ALL DIMENSIONS IN MM
MATERIAL: ALUMINIUM
SCALE: 2:1
SURFACE FINISH: UNFINISHED UNLESS STATED

TOLERANCES UNLESS
OTHERWISE STATED:
X ±0.2
X.X ±0.1
X.XX ±0.05

B-B (2 : 1)

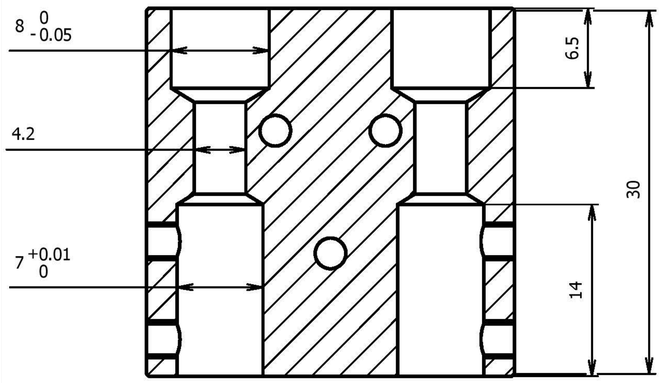

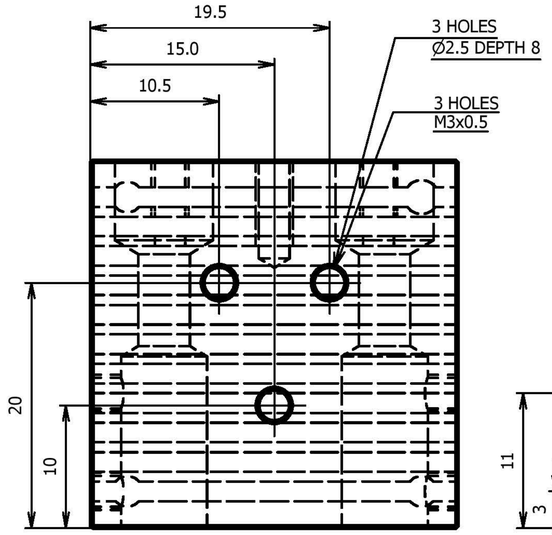

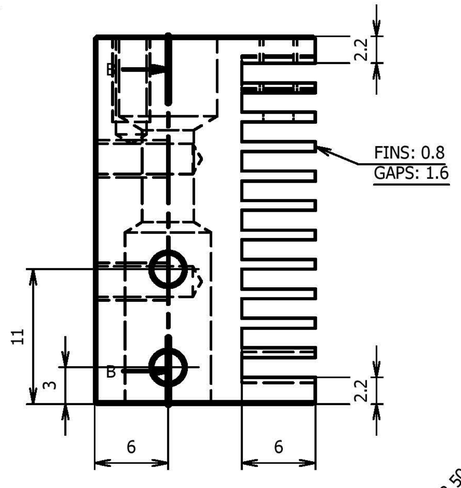

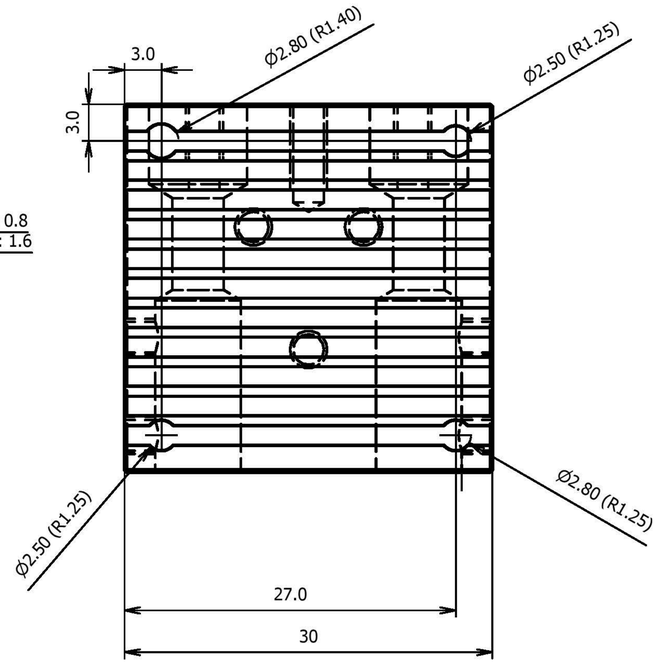

This work is licensed under a Creative Commons Attribution-NonCommercial-ShareAlike 3.0 Unported License.

Designed by	Checked by	Approved by	Date		Date	
E3D Online - JR					17/11/2014	

E3D-Online	Cyclops Cooler Block		
	CY-SINK	Edition 6	Sheet 1 / 1