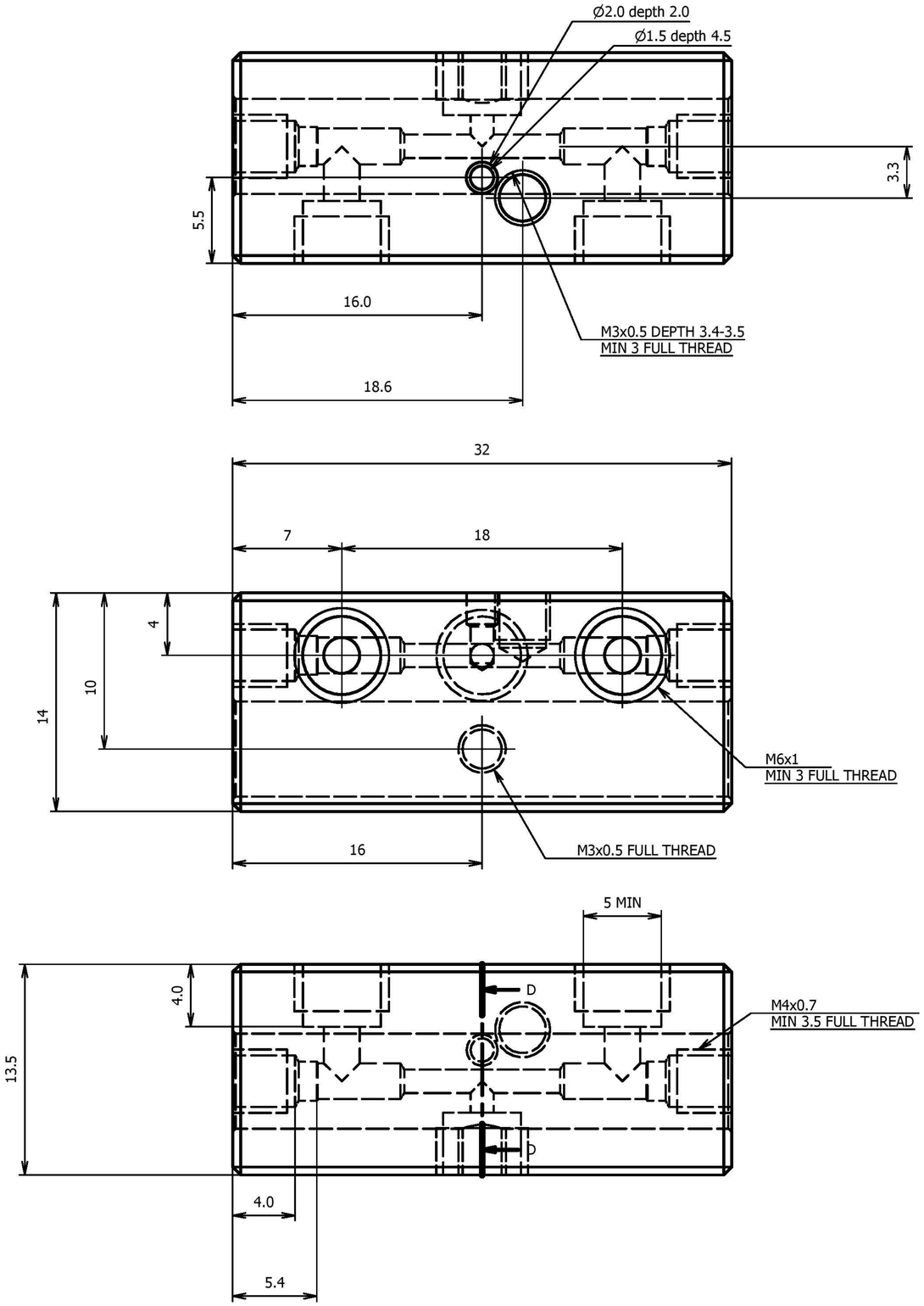

TOLERANCES UNLESS
OTHERWISE STATED:
X ±0.2
X.X ±0.1
X.XX ±0.05

THIRD ANGLE PROJECTION
ALL DIMENSIONS IN MM
MATERIAL: ALUMINIUM
SCALE: 3:1
SURFACE FINISH: UNFINISHED UNLESS STATED

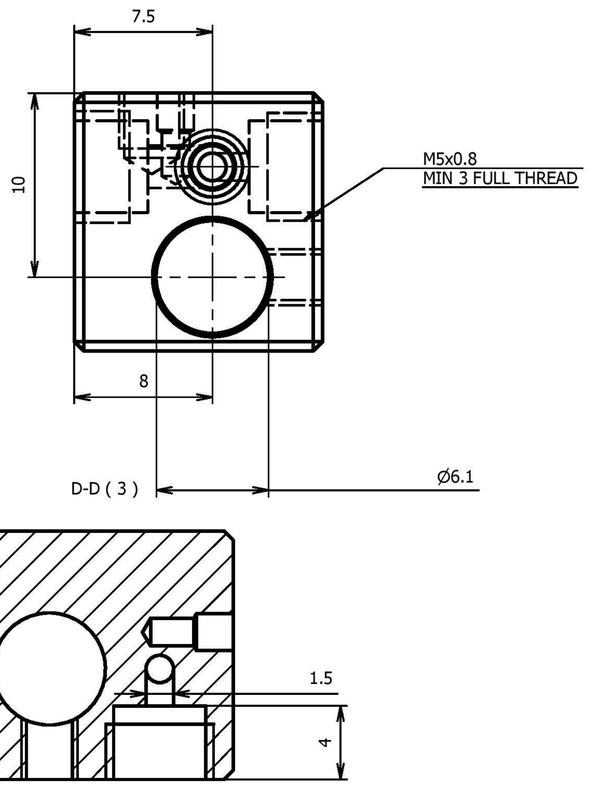

This work is licensed under a Creative Commons Attribution-NonCommercial-ShareAlike 3.0 Unported License.

Designed by	Checked by	Approved by	Date	Date	
E3D-Online JR				03/12/2014	

E3D-Online	Cyclops Heater Block		
	CY-MIX	Edition 3	Sheet 1 / 1