| REVISION HISTORY | | | |
|---|---|---|---|
| REV | DESCRIPTION | DATE | APPROVED |
| 1 | First Release | 18/01/2018 | RY |

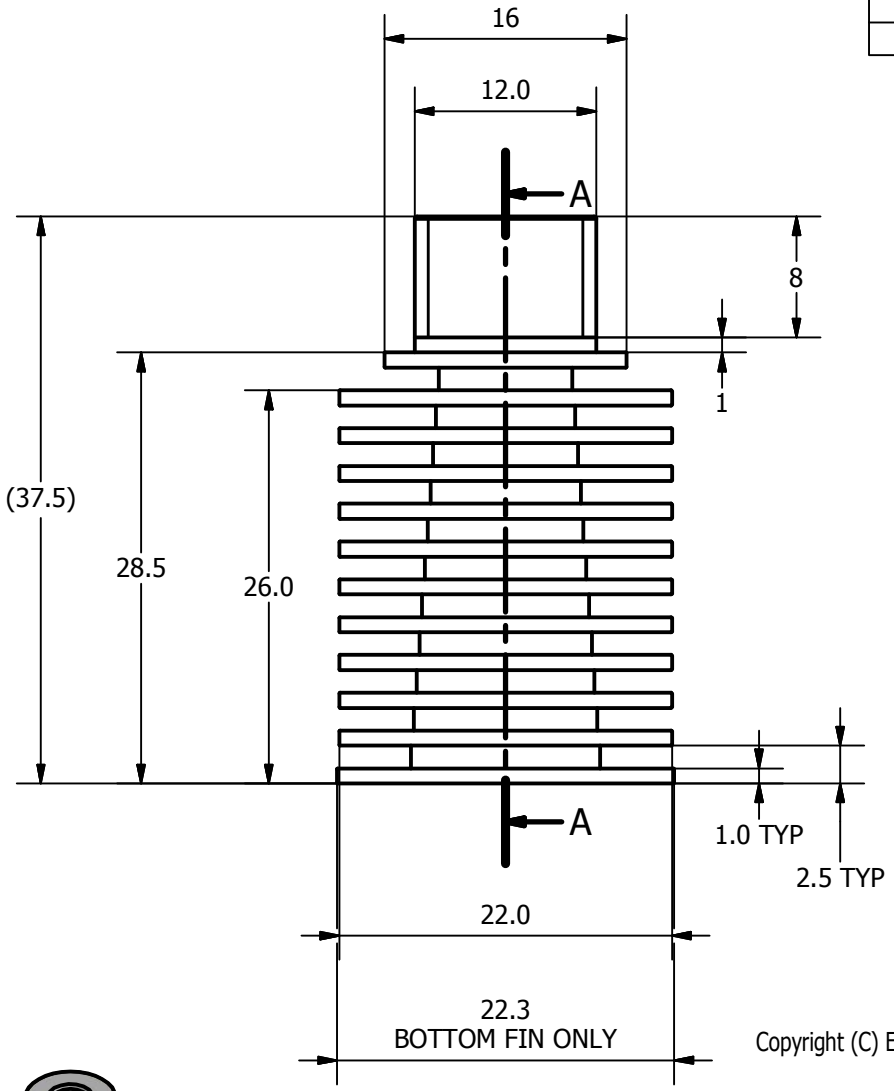


A-A ( 2:1 )

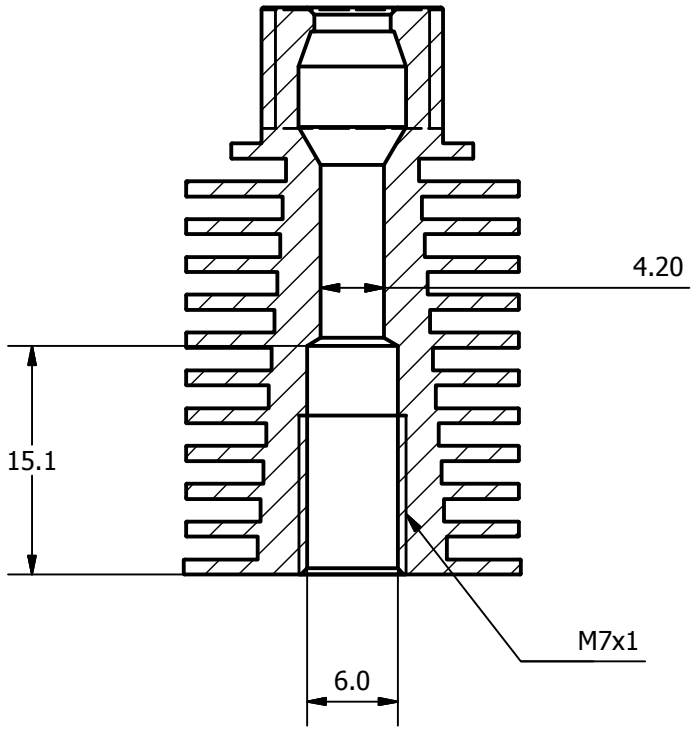


Copyright (C) E3D-Online Ltd (e3d-online.com)

These drawings are free hardware: you can redistribute it and/or modify it under the terms of the GNU General Public License as published by the Free Software Foundation, either version 3 of the License, or (at your option) any later version.

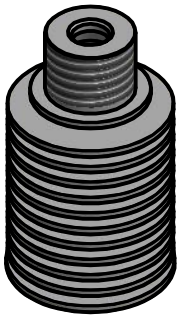

TOLERANCES UNLESS OTHERWISE STATED:
X ±0.2
X.X ±0.1
X.XX ±0.05

FIRST ANGLE PROJECTION
ALL DIMENSIONS IN MM
MATERIAL: ALUMINIUM
SCALE: 2:1
SURFACE FINISH: ANODISE BLUE

| Designed by | Checked by | Approved by | Date | | Date | |
|---|---|---|---|---|---|---|
| RY | JR | JR | 01/12/2016 | | 15/06/2002 | |

E3D-ONLINE
your toolkit for everything 3D printing

| Threaded V6 1.75mm Universal Heatsink | | |
|---|---|---|
| V6-175-SINK-SCREW | Edition 1 | Sheet 1 / 1 |